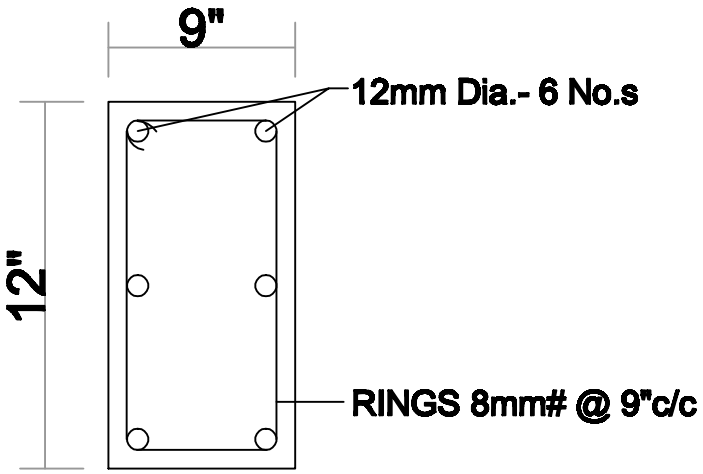

COLUMN - C1 -9" X 12"

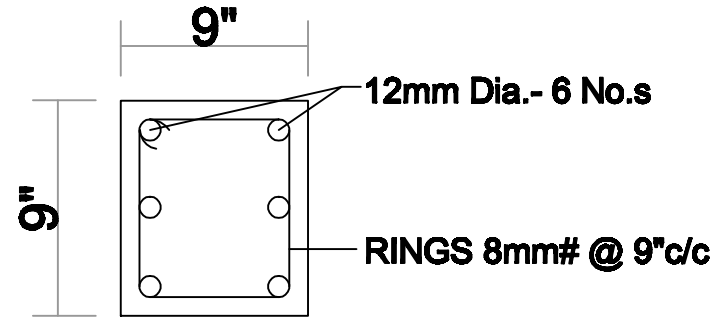

COLUMN - C2 - 9" X 9"

STRUCTURAL DETAILS FOR COLUMNS FOR FIRST & SECOND FLOORS